Aerospace
Energy
Measurement

Endevco®

Piezoresistive pressure transducer

Model 8510B -200, -500, -2000

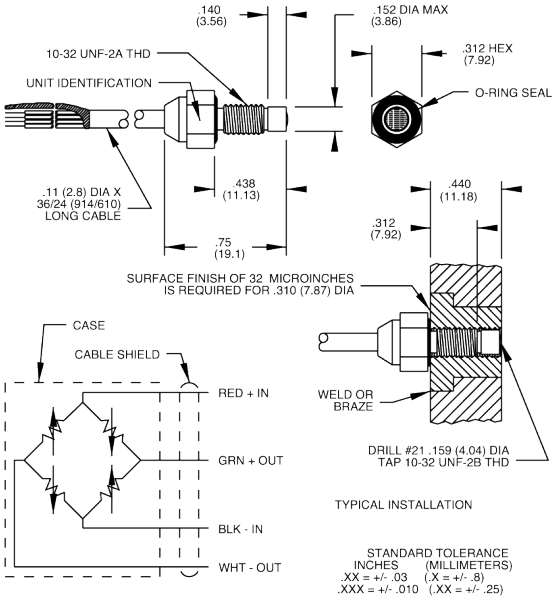

Key features

- 200, 500, 2000 psia ranges
- 300mV full scale output
- Rugged, miniature
- Gage

Model 8510B is a rugged, miniature, high sensitivity piezoresistive pressure transducer. It has a 10-32 mounting thread, 0.15 inch (3.8 mm) face diameter and is available in ranges from 1 psi to 2000 psi. High pressure ranges are shown on this sheet. Its high sensitivity combined with high resonance makes it ideal for measuring dynamic pressure.

Endevco pressure transducers feature a four-active arm strain gage bridge diffused into a unique sculptured silicon diaphragm for maximum sensitivity and wideband frequency response. Self-contained hybrid temperature compensation provides stable performance over the temperature range of 0°F to 200°F (-18°C to +93°C). Endevco transducers also feature excellent linearity (even to 3X range), high shock resistance, and negligible sensitivity to temperature transients.

8510B is designed for a wide variety of aerospace, automotive and industrial measurements which require a combination of small size, high sensitivity, and wideband frequency response. Its vent tube may be connected to a standard reference manifold or used for differential pressure measurements.

Recommended electronics for signal conditioning and power supply are models 126 and 136 general purpose three channel conditioners, ultra low noise 4430A conditioner, or the 4990A-X (Oasis) multi-channel rack mount system.

Endevco®

Piezoresistive pressure transducer

Model 8510B -200, -500, -2000

Specifications

The following performance specifications conform to ISA-RP-37.2 (1964) and are typical values, referenced at +75°F (+24°C) and 100 Hz, unless otherwise noted. Calibration data, traceable to National Institute of Standards and Technology (NIST), is supplied.

Dynamic characteristics	Units	-200	-500	-2000
Range [1]	psig	0–200	0–500	0–2000
Positive sensitivity [2]	mV/psi	1.5 ±0.5	0.6 ±0.2	0.15 ±0.05
Combined: non-linearity, non-repeatability, pressure hysteresis [3]	% FSO RSS max	0.50	0.50	1.0
Non-linearity, independent	% FSO typ	0.25	0.25	0.25
Non-repeatability	% FSO typ	0.1	0.1	0.2
Pressure hysteresis	% FSO typ	0.1	0.1	0.2
Zero measurand output [4]	mV max	±10	±10	±10
Zero shift after 3X range	±% 3X FSO max	0.2	0.2	0.2
Thermal zero shift from 0°F to +200°F (-18°C to +93°C)	±% FSO max	3	3	3
Thermal sensitivity shift from 0°F and +200°F (-18°C to +93°C)	±% max	4	4	4
Resonance frequency	Hz	320 000	500 000	900 000
Non-linearity at 3X range	% 3X FSO	1	1	1
Thermal transient response per	psi/°F	0.01	0.01	0.16
ISA-S37.10, para. 6.7, procedure I	psi/°C	0.02	0.02	0.30
Photoflash response [5]	Equiv. psi	28	70	1300
Warm-up time [6]	ms	1	1	1
Acceleration sensitivity	Equiv. psi/g	0.0003	0.0004	0.00027
Burst pressure (diaphragm/reference side) [7]	psi min	1000/300	2500/300	10 000/300

Electrical	
Full scale output	300 ±100 mV at 10.0 Vdc
Supply voltage [8]	10.0 Vdc standard, 18.0 Vdc maximum
Electrical configuration	Active four-arm piezoresistive bridge
Polarity	Positive output for increasing pressure into (+) port (end with screen on it)
Resistance	
Input	2000 ±800 ohms
Output	1600 ±600 ohms
Isolation	100 megohms minimum at 50 volts; leads to case, leads to shield, shield to case
Noise	5 microvolts rms typical, dc to 50 000 Hz; 50 microvolts rms maximum, dc to 50 000 Hz

Mechanical	
Case material	Stainless steel (17-4 PH CRES)
Cable, integral	4 conductor No. 32 AWG Teflon® insulated leads, braided shield, silicone jacket, 30 ±3 in (760 ±76 mm)
Dead volume (+) port	0.0003 cubic inches (0.005 cc)
Mounting torque	10-32 UNF-2A threaded case 0.438 inch (11.12 mm) long/15 ±5 lbf-in (1.7 ±0.6 Nm)
Weight	2.3 grams (cable weighs 9 grams/meter)

Environmental characteristics	
Temperature [9] [10]	-65°F to +250°F (-54°C to +121°C)
Vibration	1000 g pk
Acceleration	1000 g
Shock	20 000 g, 100 microsecond haversine pulse
Humidity	Isolation resistance greater than 100 megohms at 50 volts when tested per MIL-STD-202E, method 103B, test condition B

Calibration data supplied

Data supplied for all parameters in Certified Performance section. Optional calibrations available for all parameters in Typical Performance section.

Endevco®

Piezoresistive pressure transducer

Model 8510B -200, -500, -2000

Accessories

Product	Description	8510B
EHR93	O-ring, Viton	Included
EHR96	O-ring, fluorosilicone	Optional
24328-3	4 conductor shielded cable, white	Optional

Notes

1. Pressure ranges can be considered bidirectional, e.g., an 8510B-200 can be used to measure + or -200 psig. Sensitivity in the positive direction is typically within 1% of sensitivity in the negitive direction. Sensitivity calibration provided with each unit is for the positive direction.
2. 1 psi = 6.895 kPa = 0.069 bar.
3. FSO (Full Scale Output) is defined as transducer output from 0 to full scale pressure, which is nominally 300 mV.
4. Zero Measurand Output (ZMO) is the transducer output with 0 psig applied.
5. Per ISA-S37.10, Para. 6.7, Proc. II. The metal screen partially shields the silicon diaphragm from incident radiation. Accordingly, light incident at acute angles to the screen generally increases the error by a factor of 2 or 3.
6. Warm-up time is defined as elapsed time from excitation voltage "turn on" until the transducer output is within ±1% of reading accuracy.
7. Reference side pressure may be 300 psi on all ranges if differential limits (psid) are not exceeded.
8. Please specify the excitation voltage you will use and we will calibrate at that voltage for highest accuracy. See model definition.
9. Internal seals are epoxy and are compatible with clean dry gas media. Media in (+) measurand port is exposed to CRES, nickel-iron alloy, Parylene C, epoxy, and the Viton® O-ring media in (-) measurand port is exposed to the above and RTV silicone coating. For use in water or corrosive media, contact the factory for modifications and installation precautions which may be taken to extend service life.
10. O-Ring, Endevco part number EHR93 Viton®, is supplied unless otherwise specified on Purchase Order. Part number EHR96, Parker material L677-70, for leak tight operation below 0°F (-18°C) is available on special order.
13. Maintain high levels of precision and accuracy using Meggitt's factory calibration services. Call Meggitt's inside sales force at 800-982-6732 for recommended intervals, pricing and turn-around time for these services as well as for quotations on our standard products.

Model definition

8510B - XXXX - YYY - E

- E: Excitation voltage (if no voltage is specified the default is 10 Vdc)
  A=2 Vdc, B=2.5 Vdc, C=3.3 Vdc, D=5 Vdc, E=7, F=7.5
- YYY: Cable length (if no dash number is specified the default is 30 inches)
  For lengths ≤ 10 ft specify 1 ft increments (12", 24"...120")
  For lengths ≤ 10 ft specify 5 ft increments (180", 240"...etc)
- XXXX: Pressure range (psig)
  -200, -500, -2000
- 8510B: Basic model number

Other options

M1 No vent tube
M5 Metric thread
M7 No screen
M8 "A" screen, black grease - ITAR
M11 "B" screen
M37 Integral connector, no vent tube, hole on side
M41 Gel
M43 "B" screen, black grease - ITAR

Contact

Meggitt Sensing Systems
14600 Myford Road
Irvine
CA 92606, USA
Tel: +1 (949) 493 8181
Fax: +1 (949) 661 7231
www.endevco.com
www.meggitt.com

CERTIFIED ISO 9001 ACCREDITED APPLIES TO CALIFORNIA FACILITY

Continued product improvement necessitates that Meggitt reserve the right to modify these specifications without notice. Meggitt maintains a program of constant surveillance over all products to ensure a high level of reliability. This program includes attention to reliability factors during product design, the support of stringent Quality Control requirements, and compulsory corrective action procedures. These measures, together with conservative specifications have made the name Endevco synonymous with reliability. 022715

MEGGITT
smart engineering for extreme environments